3D STUDIO MAX

AUTOCAD

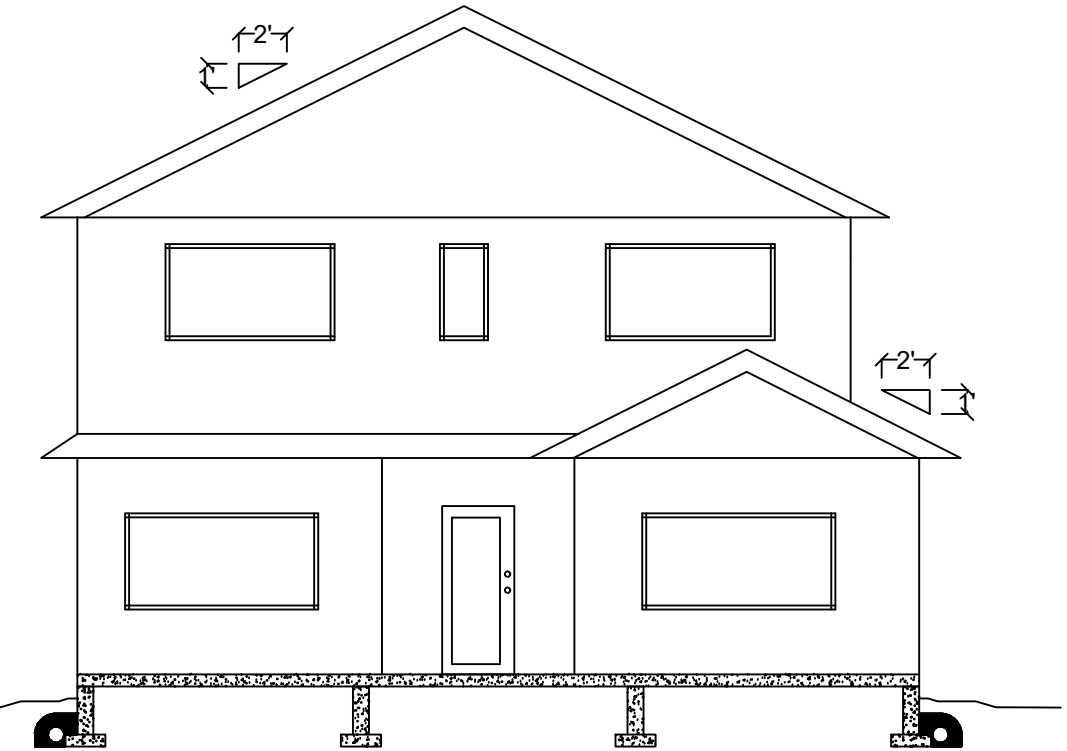

FRONT ELEVATION

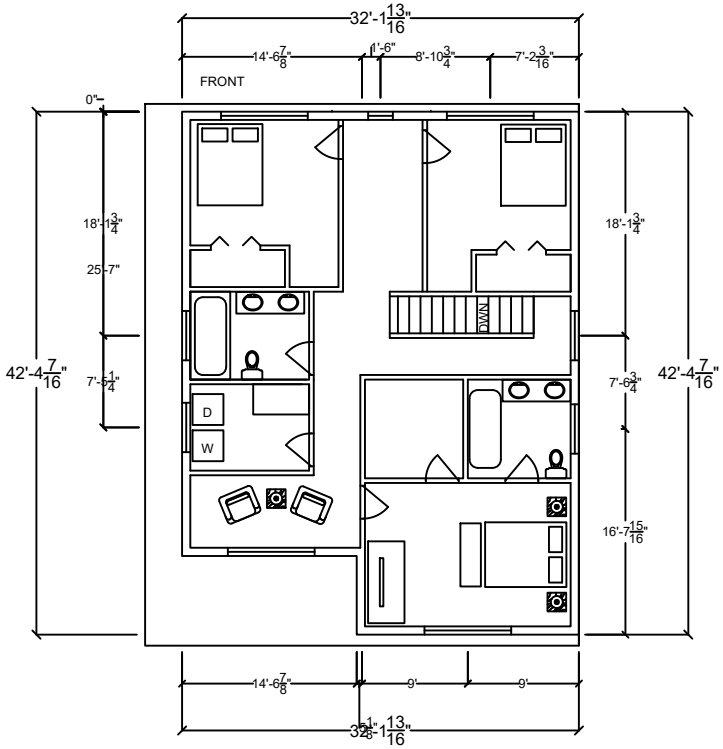

SECOND FLOOR
1272.07 sqft

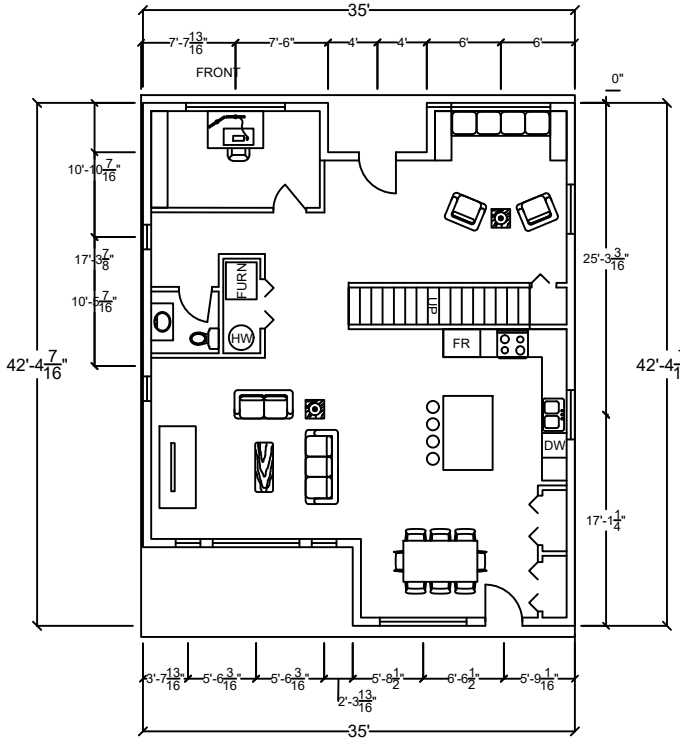

FIRST FLOOR
1342.67 sqft

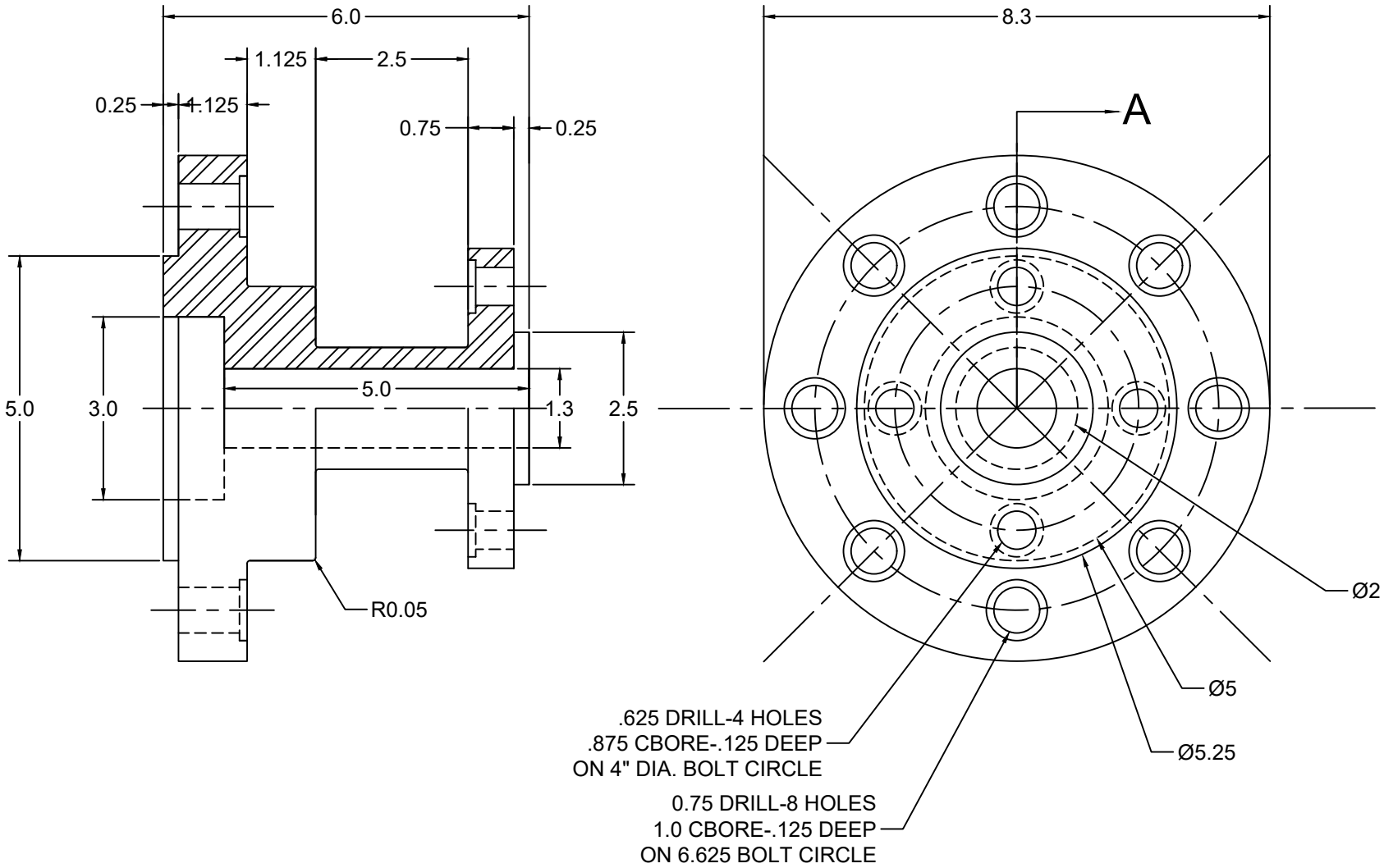
6.0
1.125
2.5
0.25
1.125
0.75
0.25
5.0
3.0
5.0
1.3
2.5
R0.05
8.3
A
Ø2
Ø5
Ø5.25
.625 DRILL-4 HOLES
.875 CBORE-.125 DEEP
ON 4" DIA. BOLT CIRCLE
0.75 DRILL-8 HOLES
1.0 CBORE-.125 DEEP
ON 6.625 BOLT CIRCLE

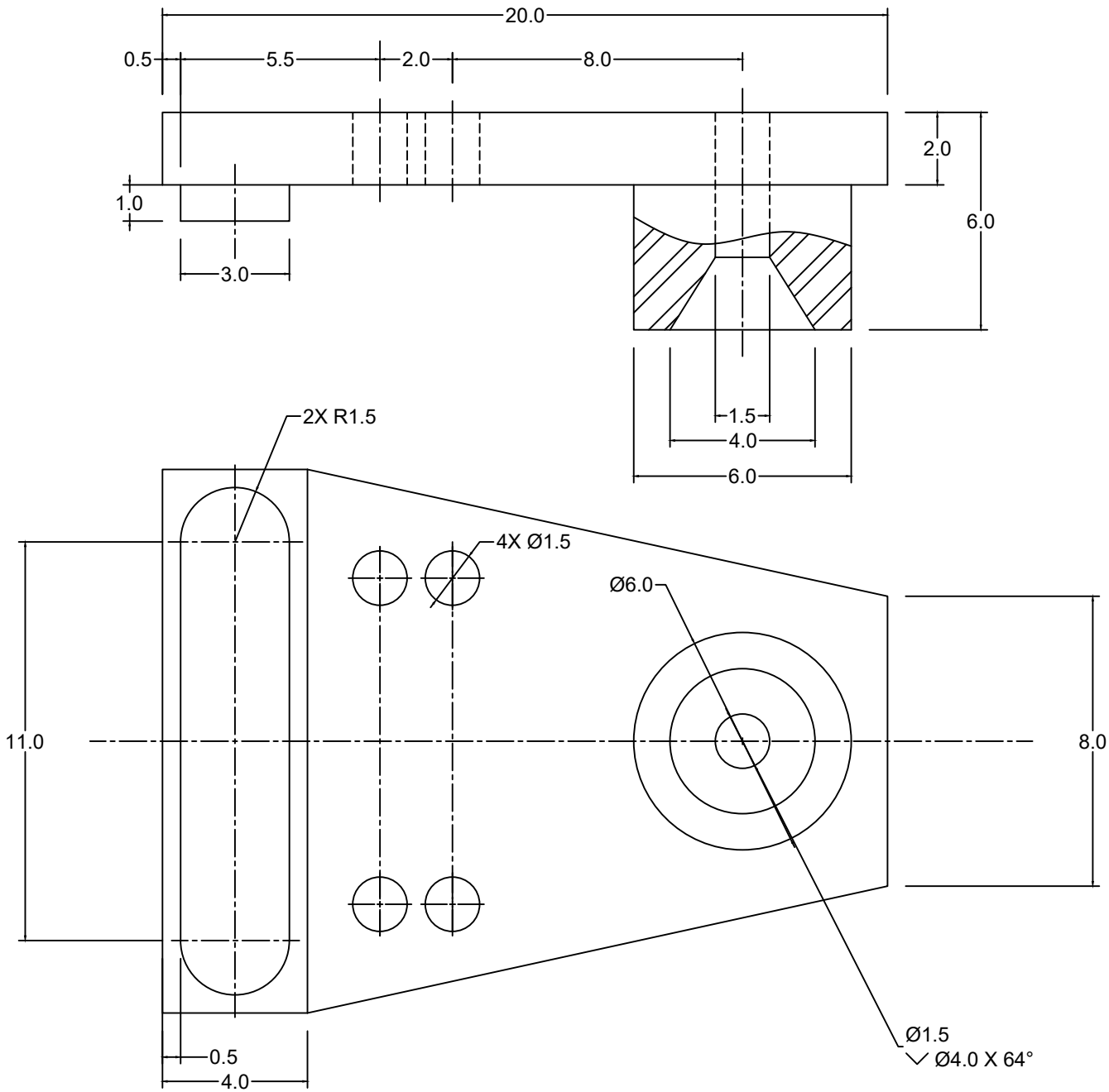
20.0
0.5
5.5
2.0
8.0
2.0
6.0
1.0
3.0
1.5
4.0
6.0
2X R1.5
4X Ø1.5
Ø6.0
11.0
8.0
Ø1.5
Ø4.0 X 64°
0.5
4.0

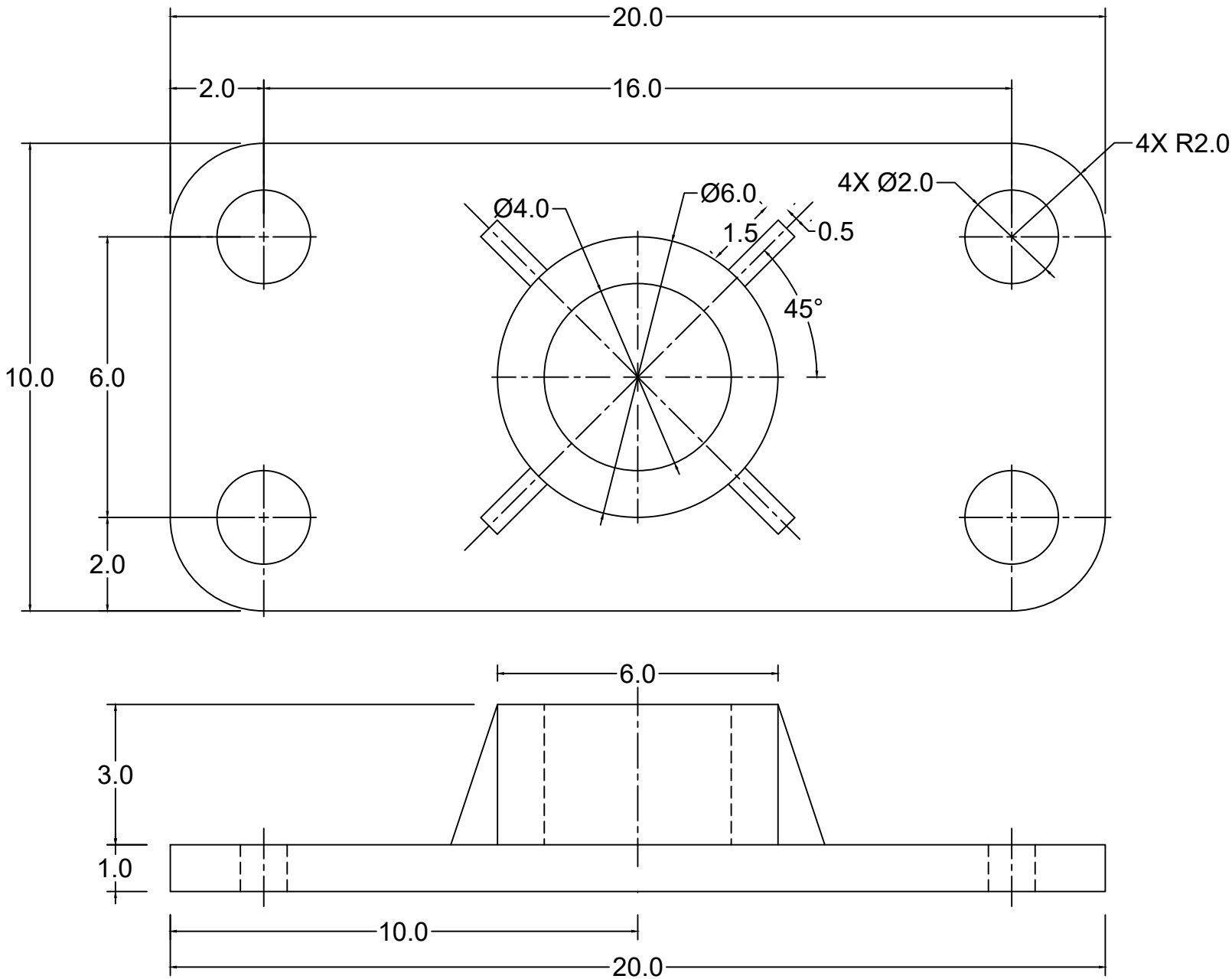
20.0
2.0
16.0
4X R2.0
4X Ø2.0
Ø4.0
Ø6.0
1.5
0.5
45°
10.0
6.0
2.0
6.0
3.0
1.0
10.0
20.0

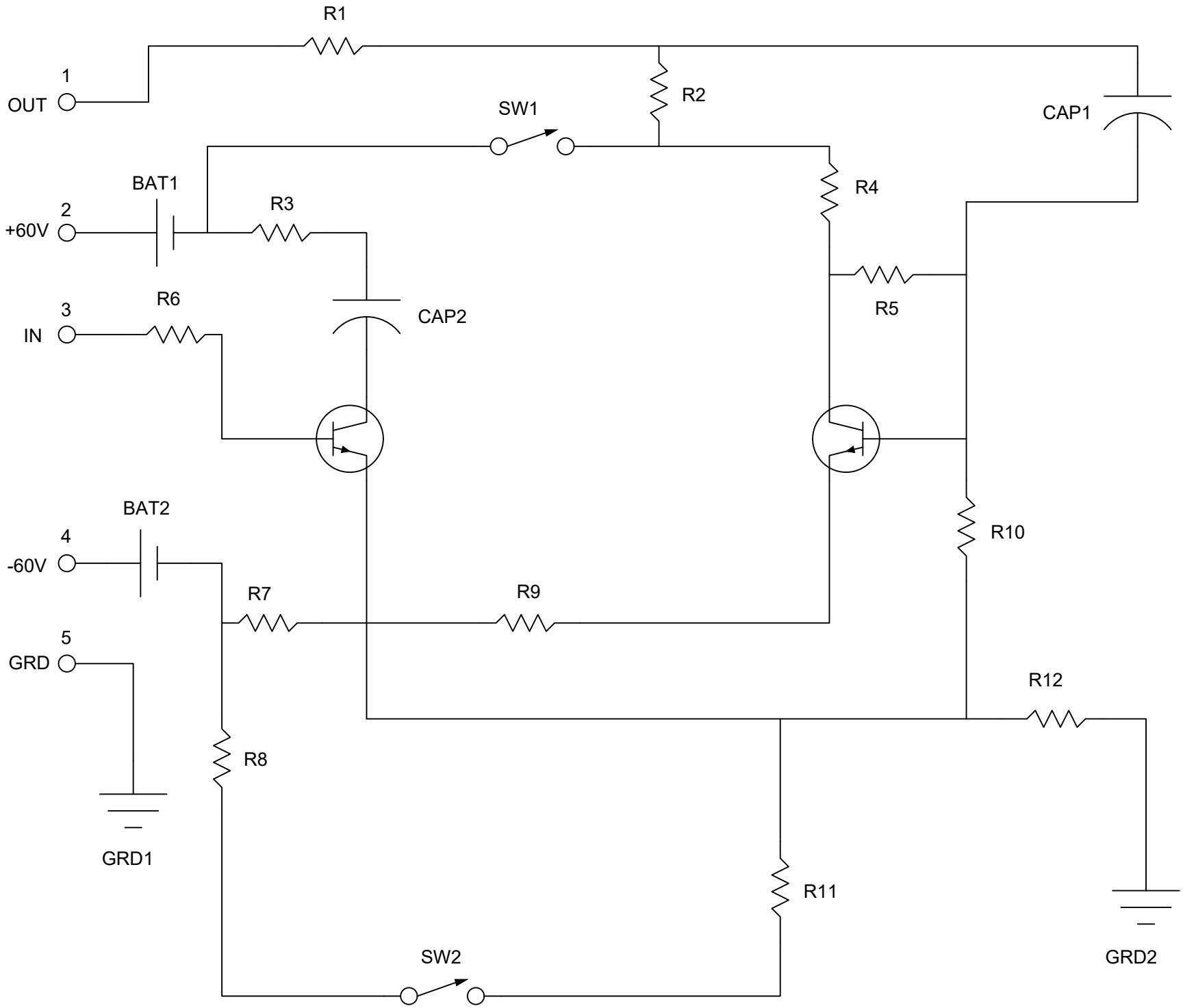
R1
1
OUT
R2
SW1
CAP1
BAT1
R4
2
+60V
R3
R5
R6
3
IN
CAP2
BAT2
R10
4
-60V
R7
R9
5
GRD
R12
R8
GRD1
R11
SW2
GRD2

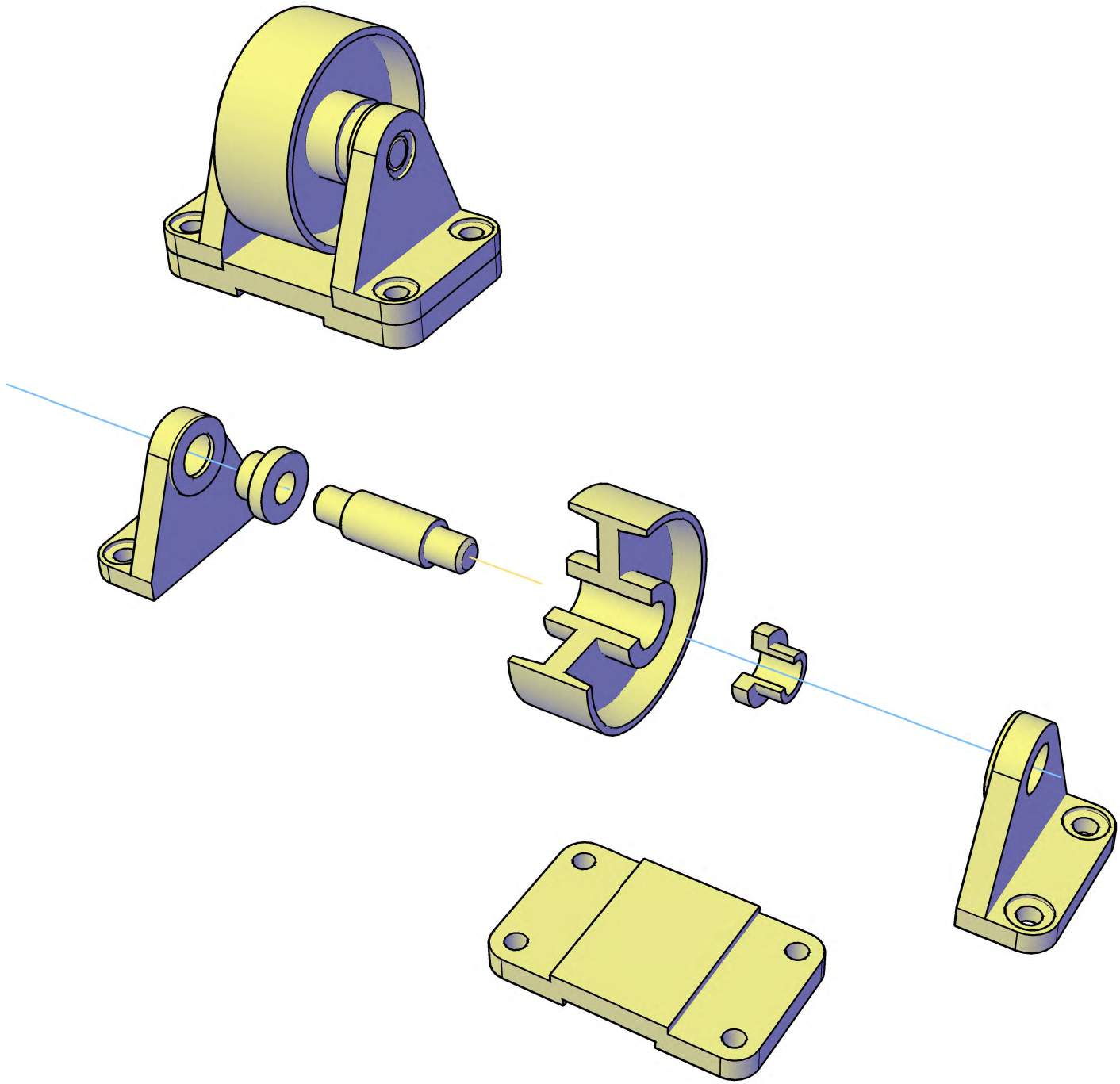

INVENTOR

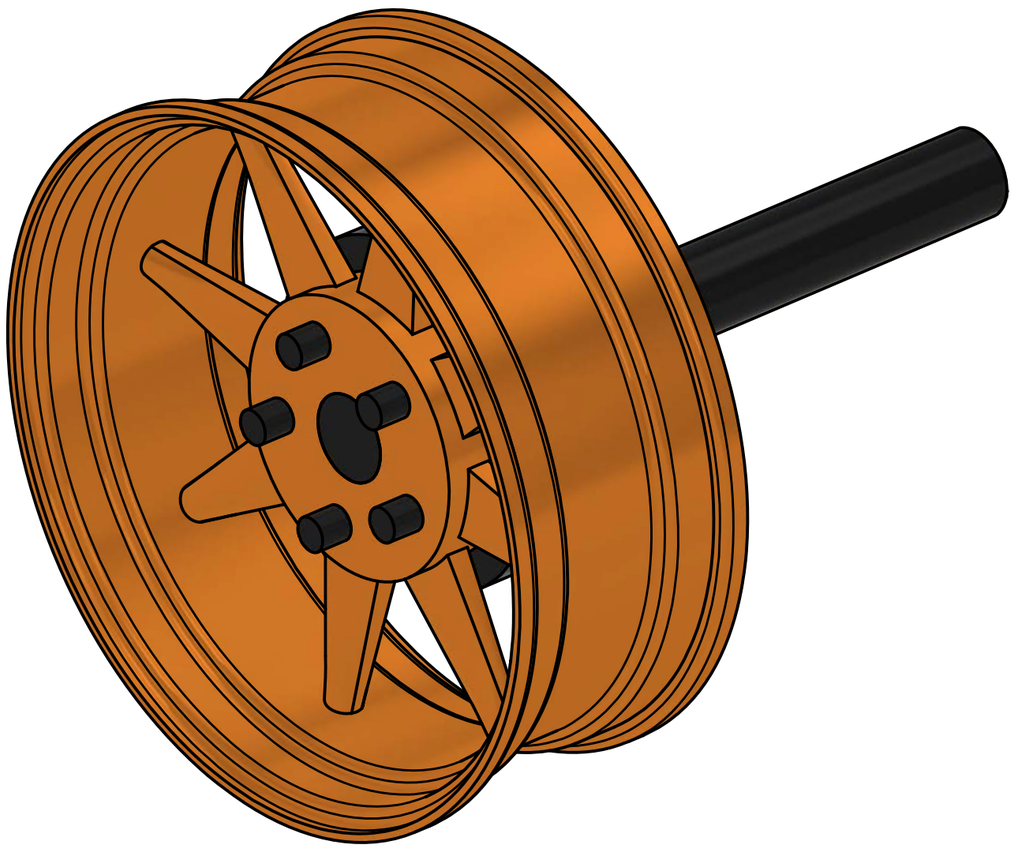

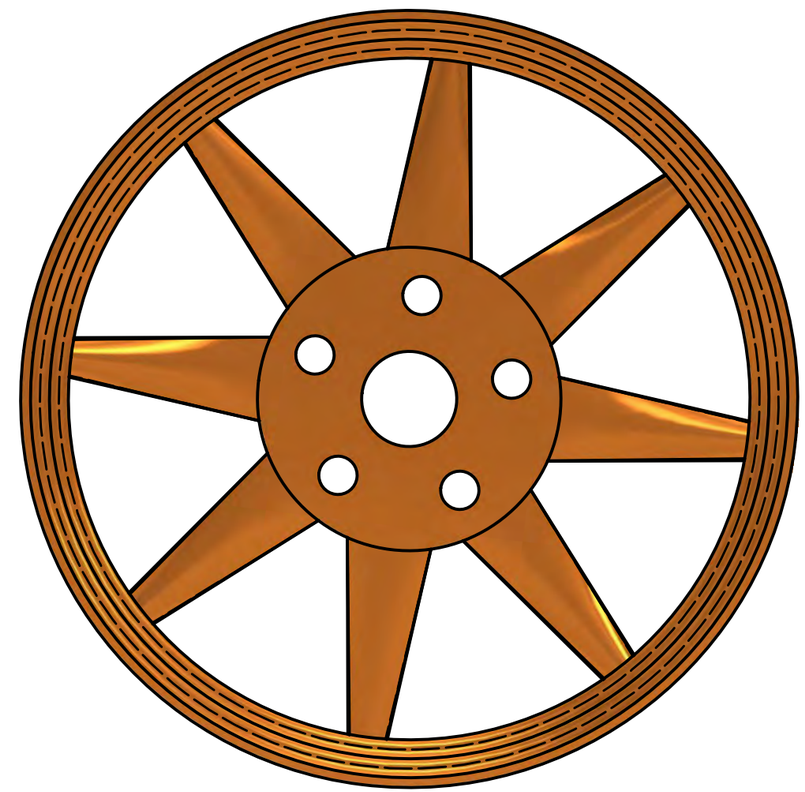

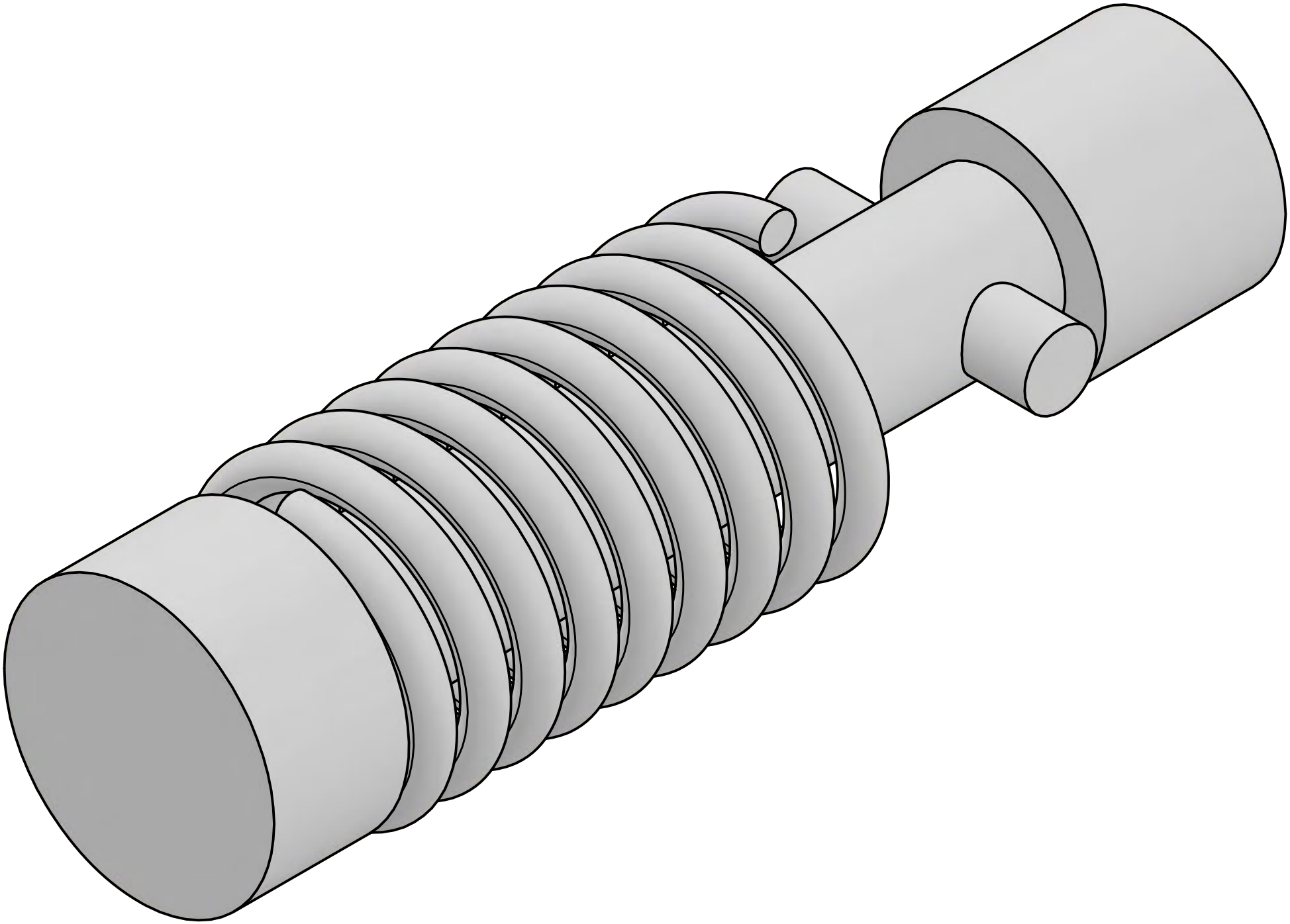

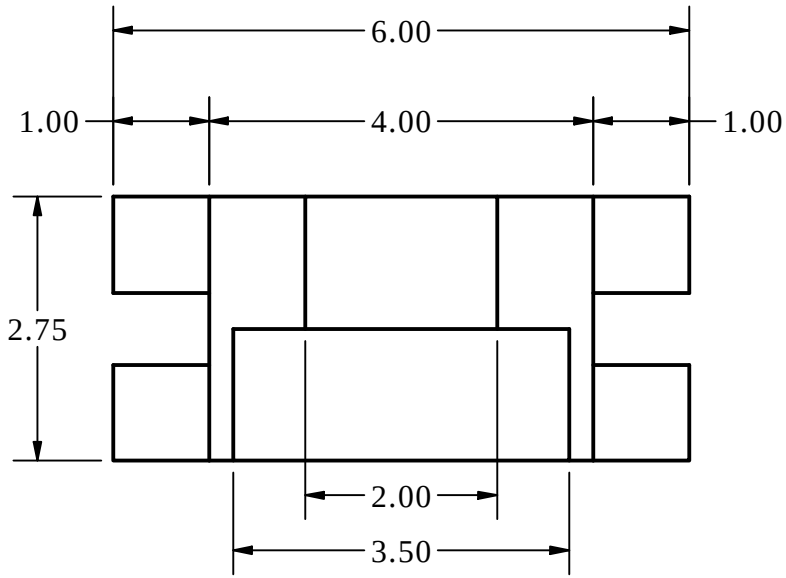

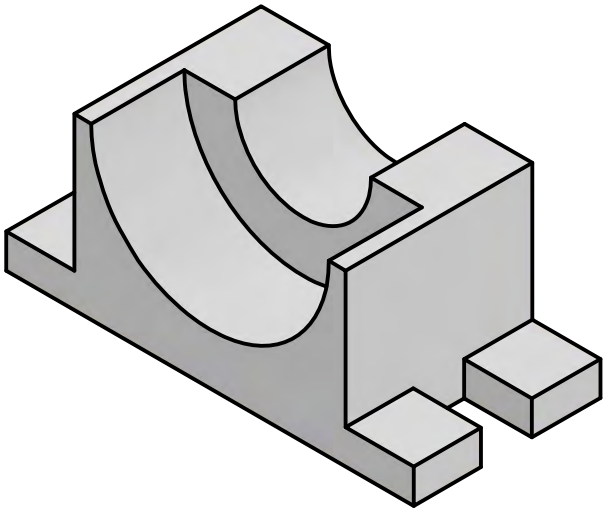

Roller Base

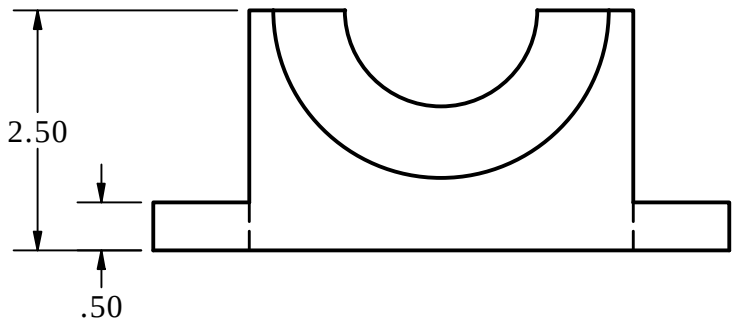

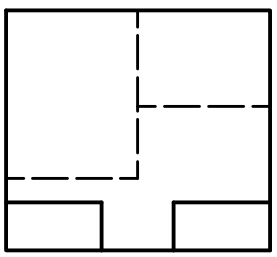

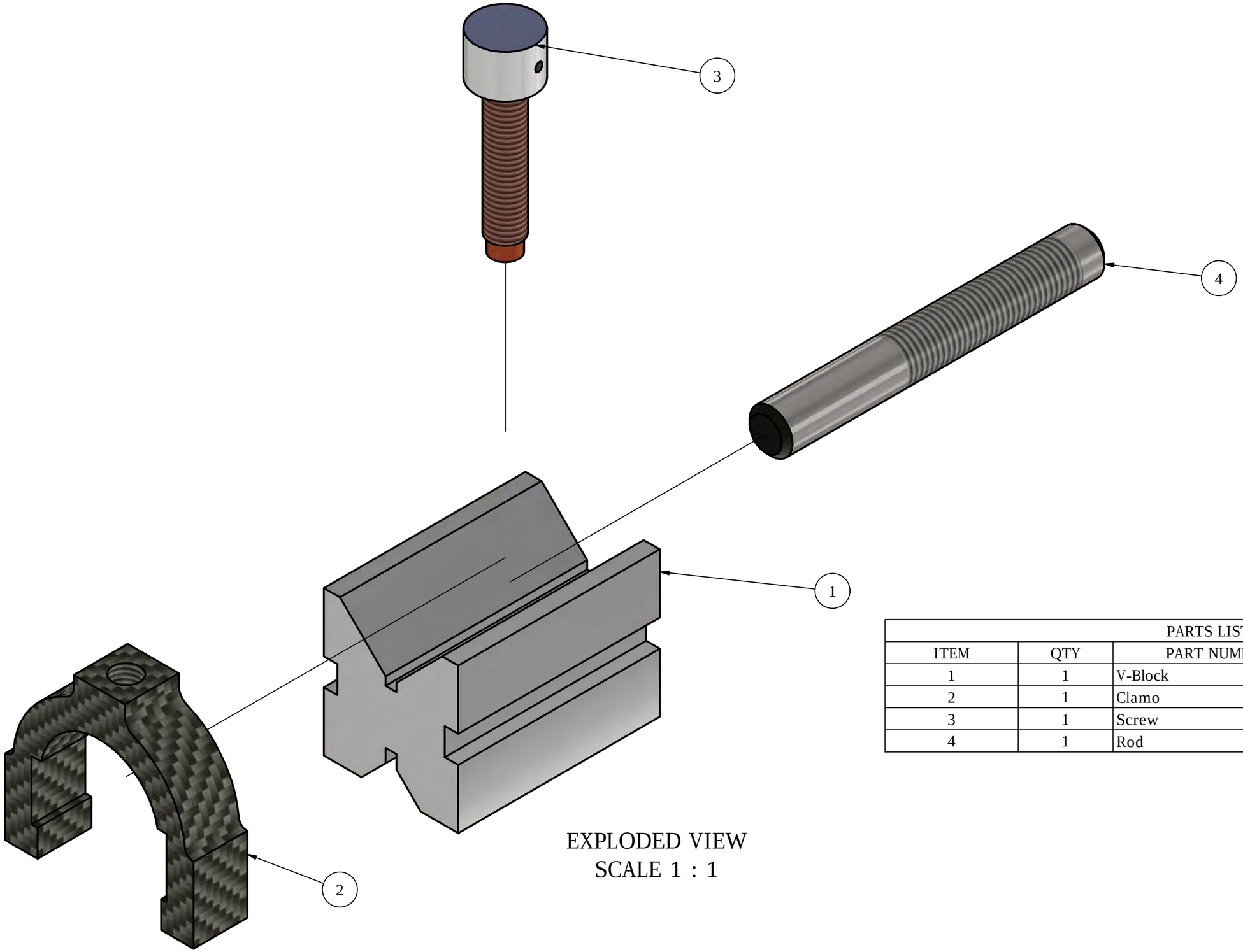

EXPLODED VIEW
SCALE 1 : 1

PARTS LIST			
ITEM	QTY	PART NUMBER	DESCRIPTION
1	1	V-Block	
2	1	Clamo	
3	1	Screw	
4	1	Rod	

CIVIL 3D

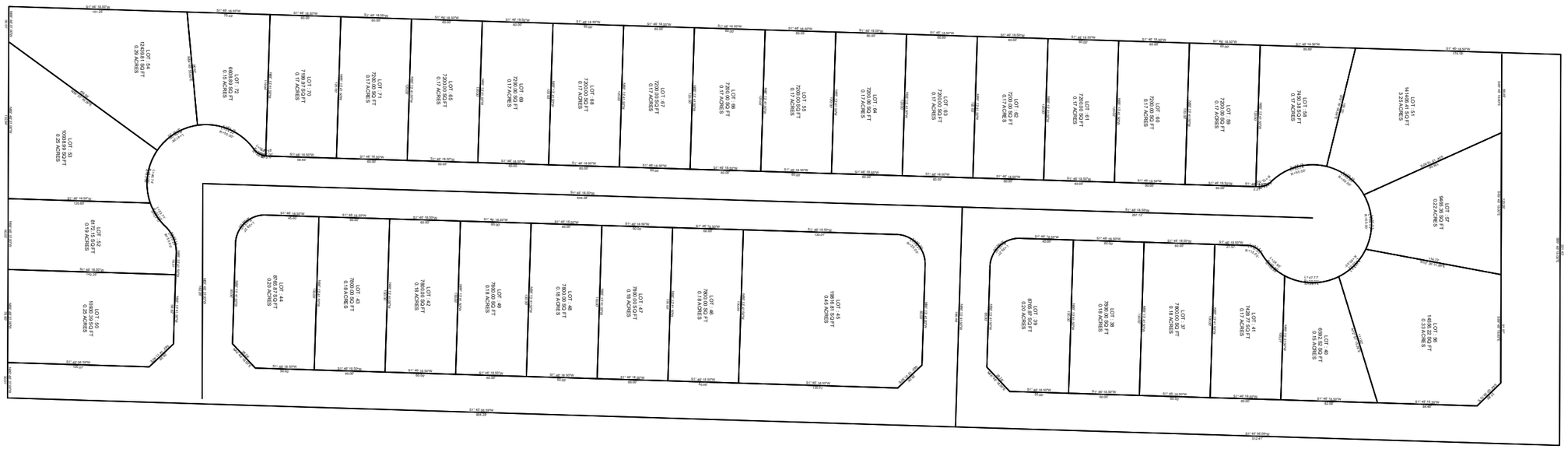

Project:

Maryland Subdivision

Drawing:

Legal Plan

Scale: NTS	Submission #: 1/1	Submission Date: September 2021
Designed By: Brighton College	Drawn By: Amanda Mickelby	Checked By: Brighton College

Company:

Brighton College

Project Number:

Sample

Drawing Number:

Sample

Date:

September 2021

Sheet Number:

1/4

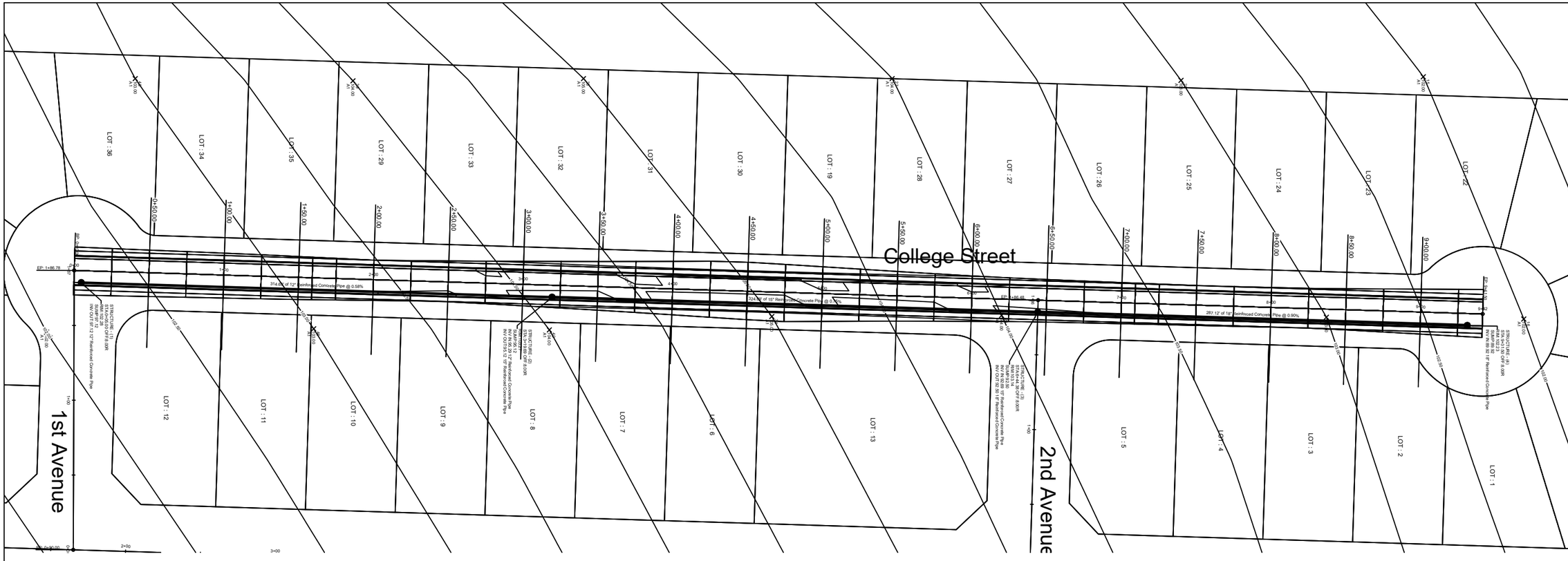

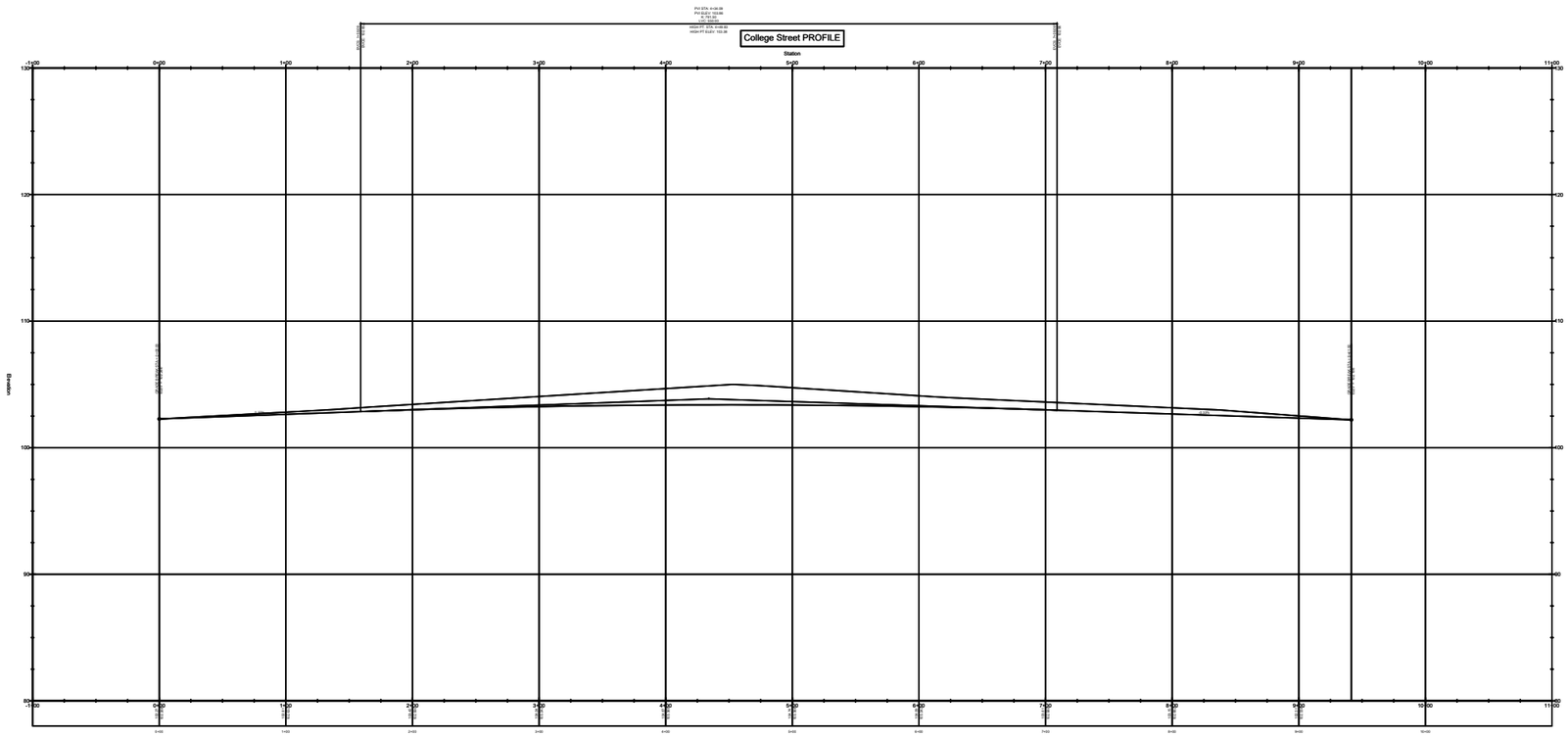

Project:

Maryland Subdivision

Drawing:

Plan and Profile (College St)

Scale:	Submission #:	Submission Date:
NTS	1/1	September 2021

Designed By:	Drawn By:	Checked By:
Brighton College	Amanda Mickelby	Brighton College

Company:

Brighton College

Project Number:

Sample

Drawing Number:

Sample

Date:

September 2021

Sheet Number:

2/4

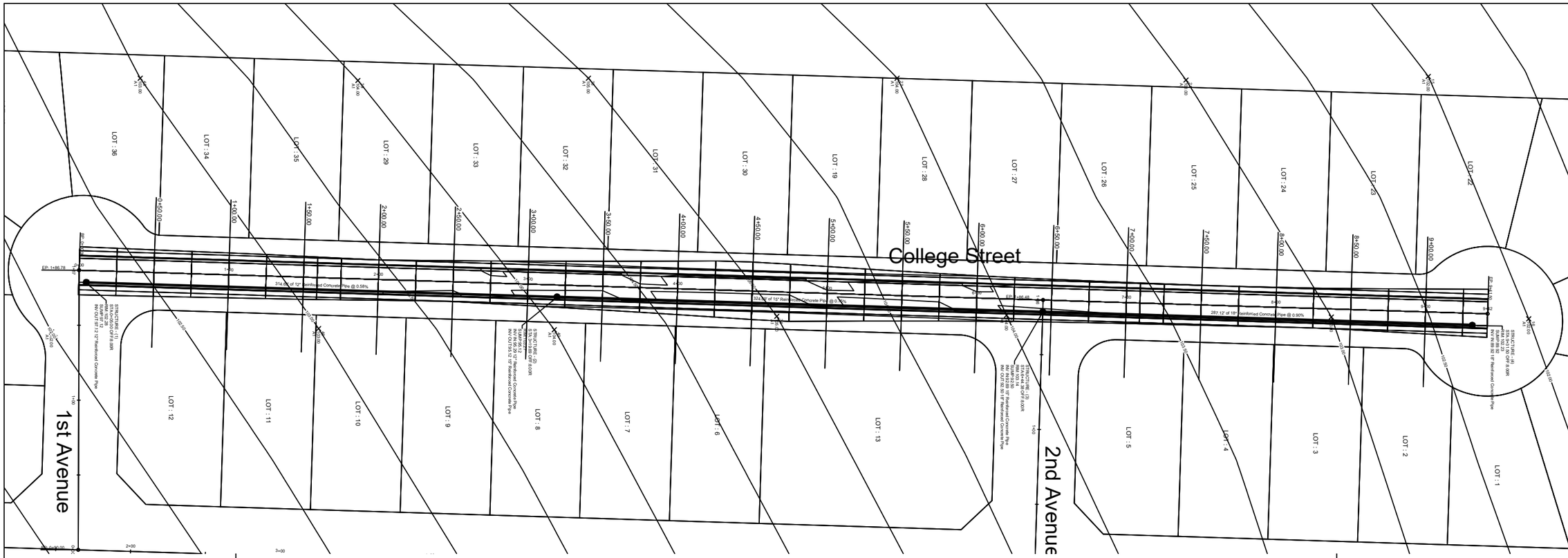

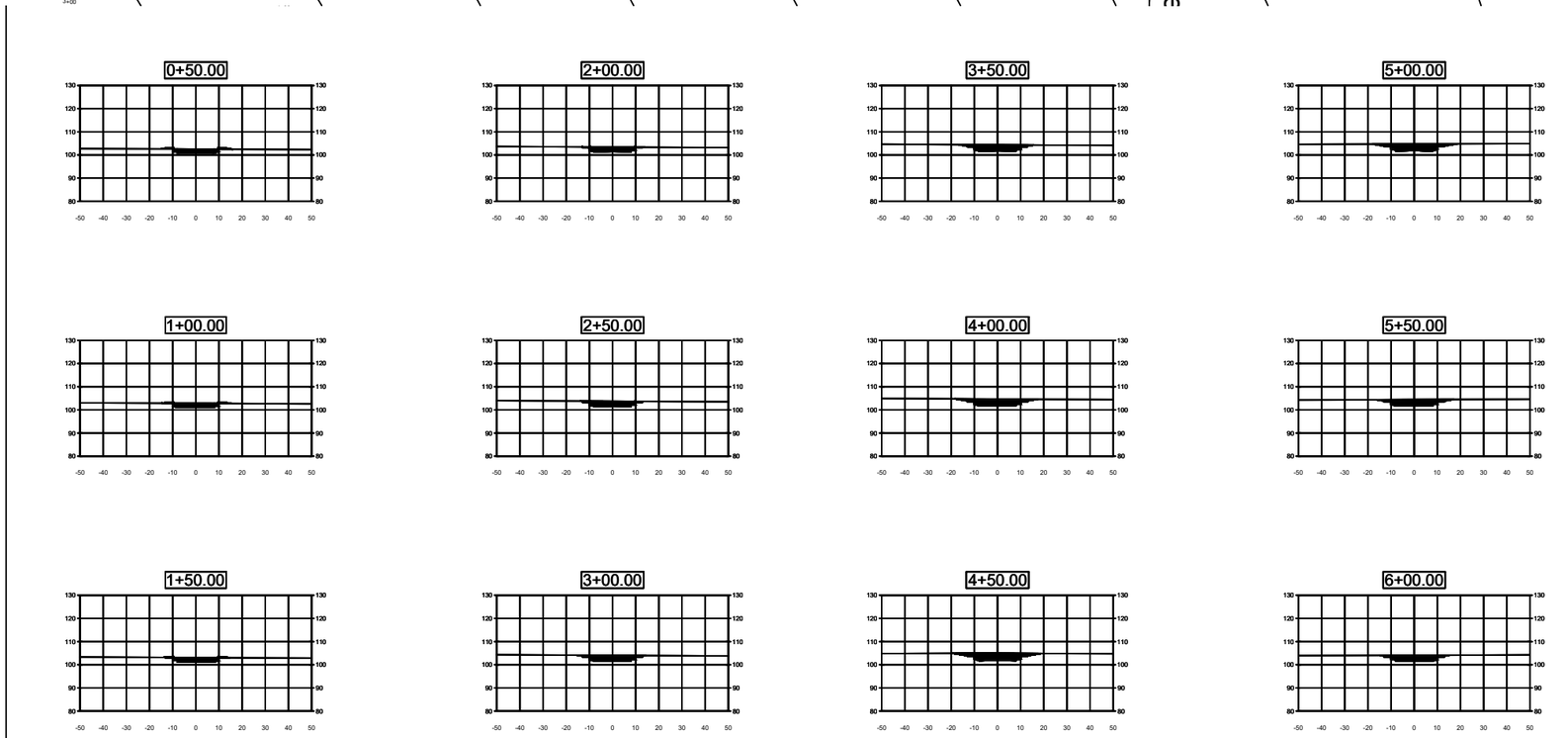

Project:

Maryland Subdivision

Drawing:

Plan and Sections (College Street)

Scale:	Submission #:	Submission Date:
NTS	1/1	September 2021

Designed By:	Drawn By:	Checked By:
Brighton College	Amanda Mickelby	Brighton College

Company:

Brighton College

Project Number:

Sample

Drawing Number:

Sample

Date:

September 2021

Sheet Number:

3/4

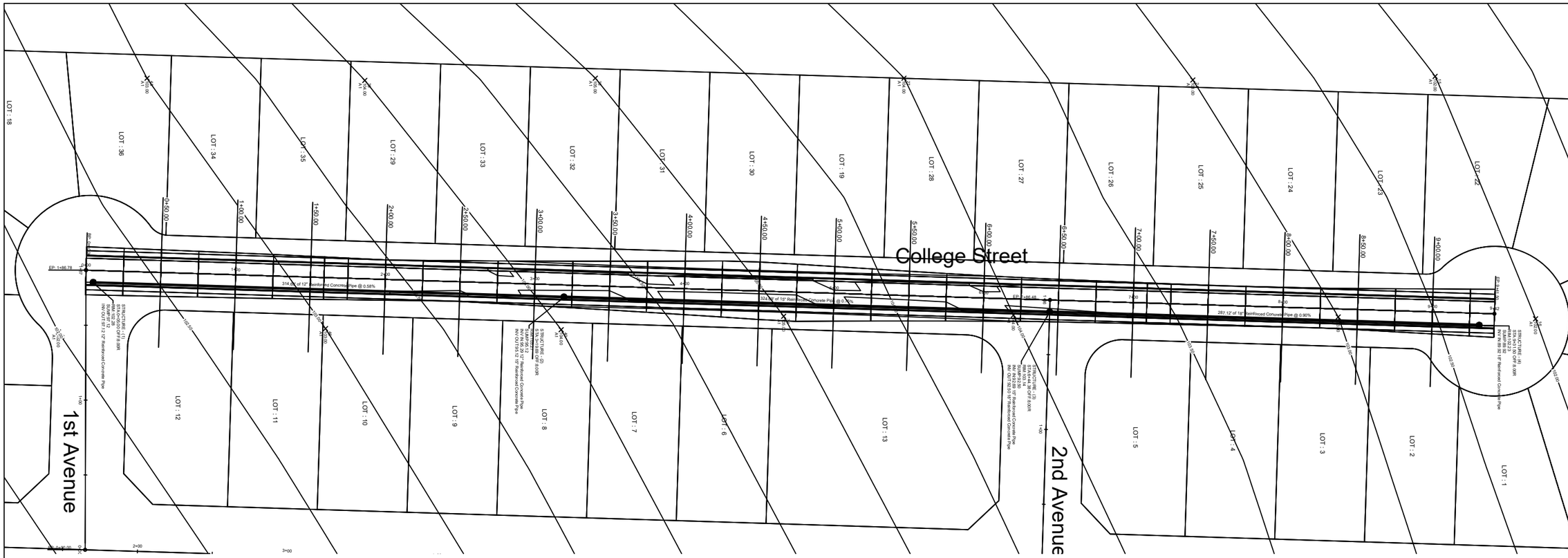

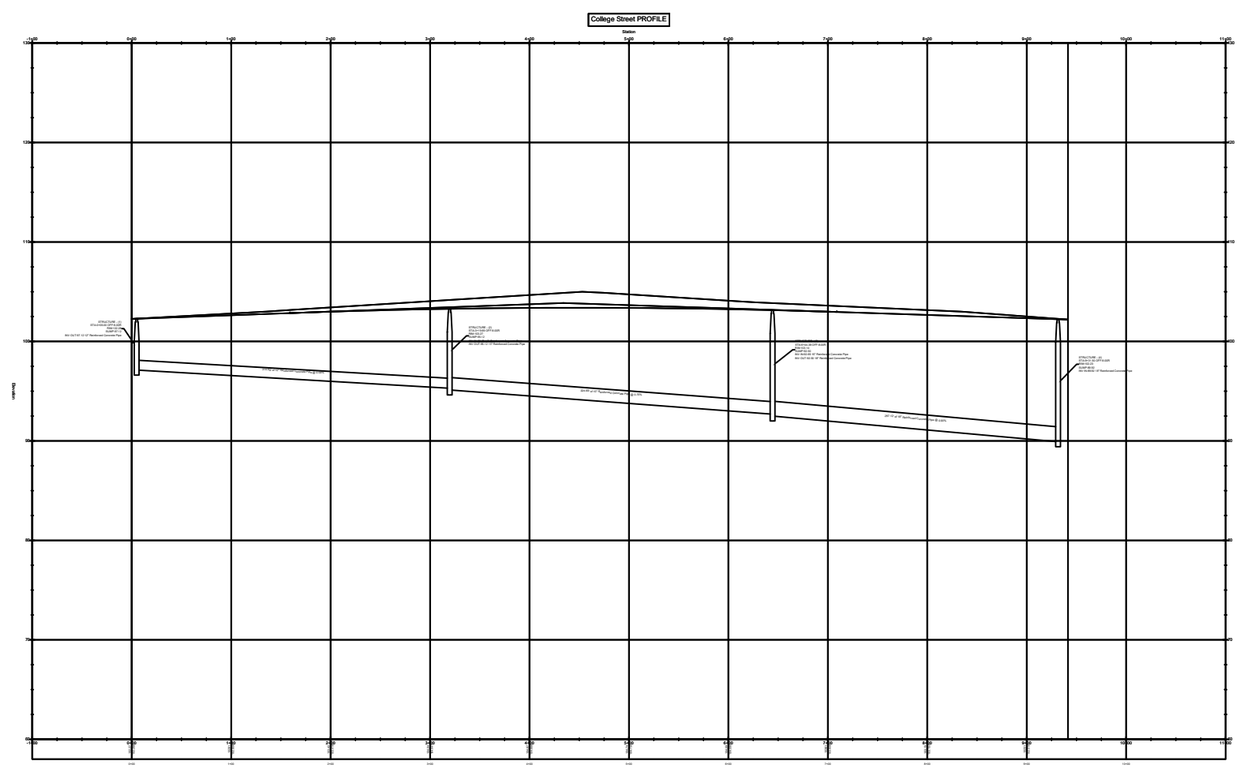

Project:

Maryland Subdivision

Drawing:

Plan and Profile
(College St. Sewer)

Scale:	Submission #:	Submission Date:
NTS	1/1	September 2021

Designed By:	Drawn By:	Checked By:
Brighton College	Amanda Mickelby	Brighton College

Company:

Brighton College

Project Number:

Sample

Drawing Number:

Sample

Date:

September 2021

Sheet Number:

4/4

REVIT

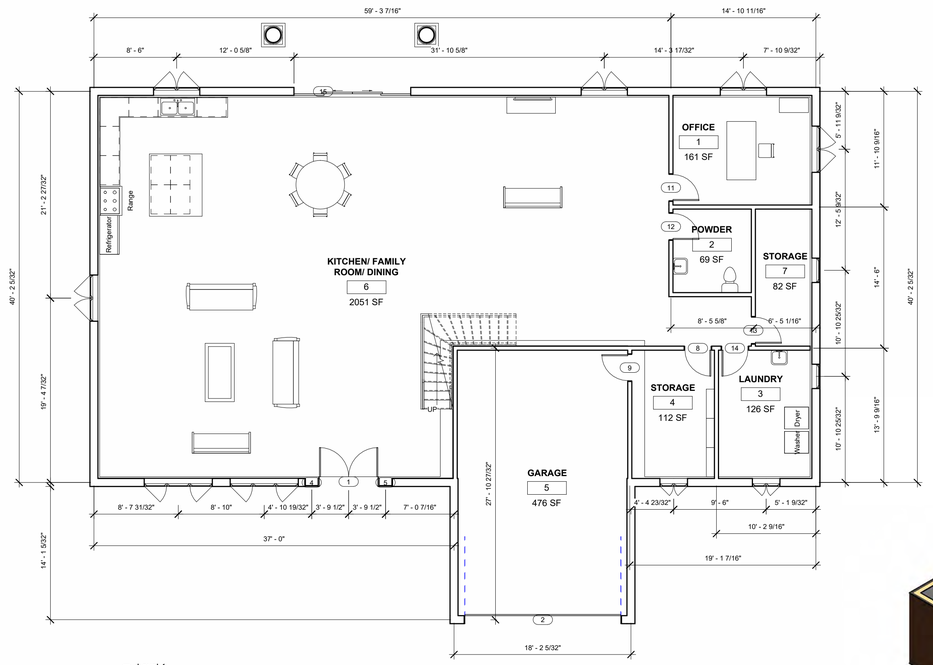

1 Level 1
3/16" = 1'-0"

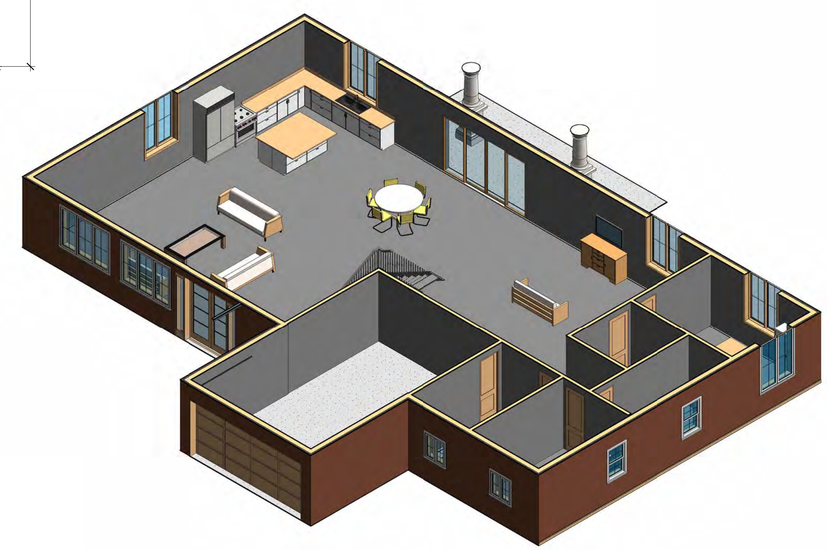

2 ISO LEVEL 1

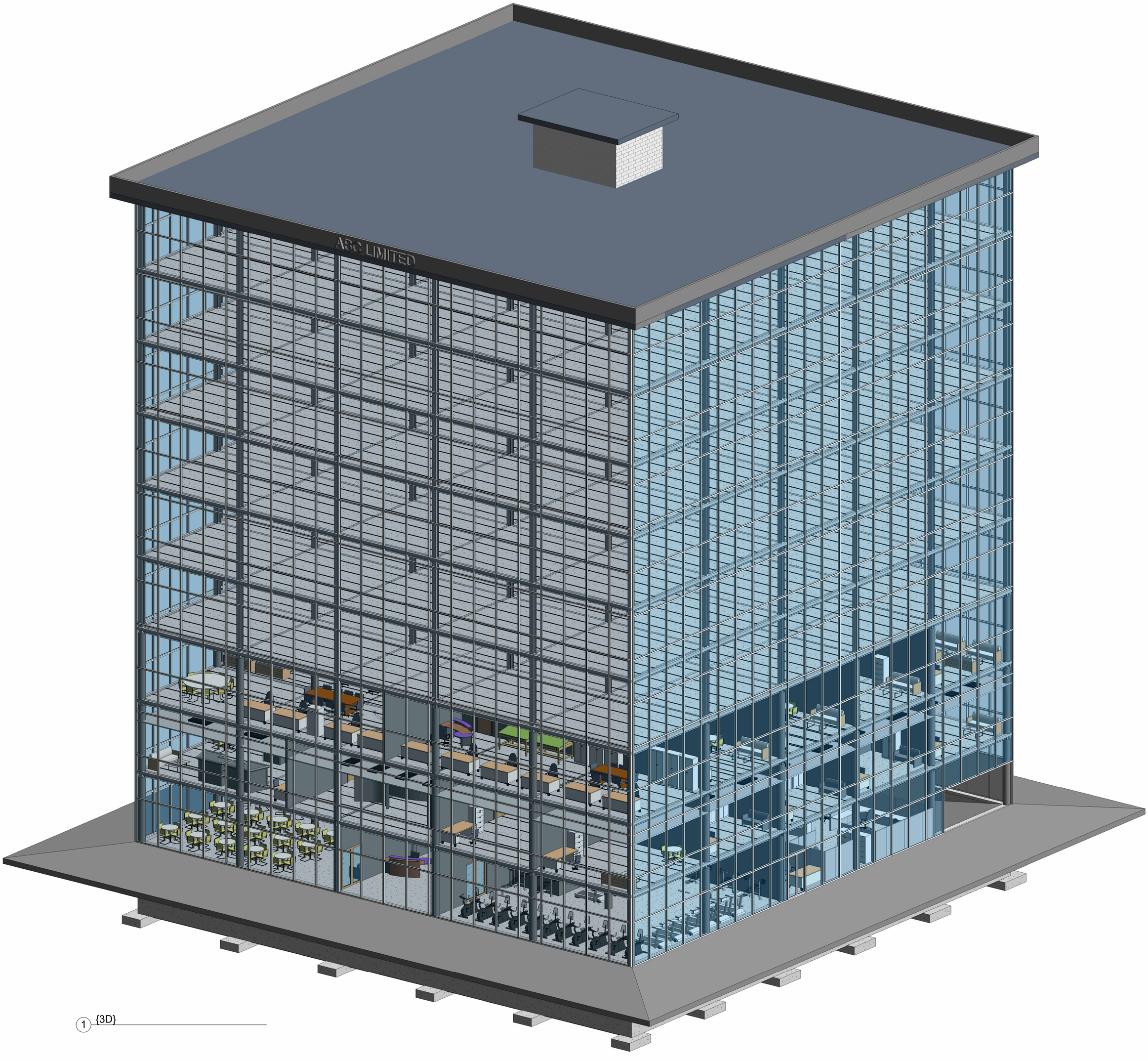

1 {3D}
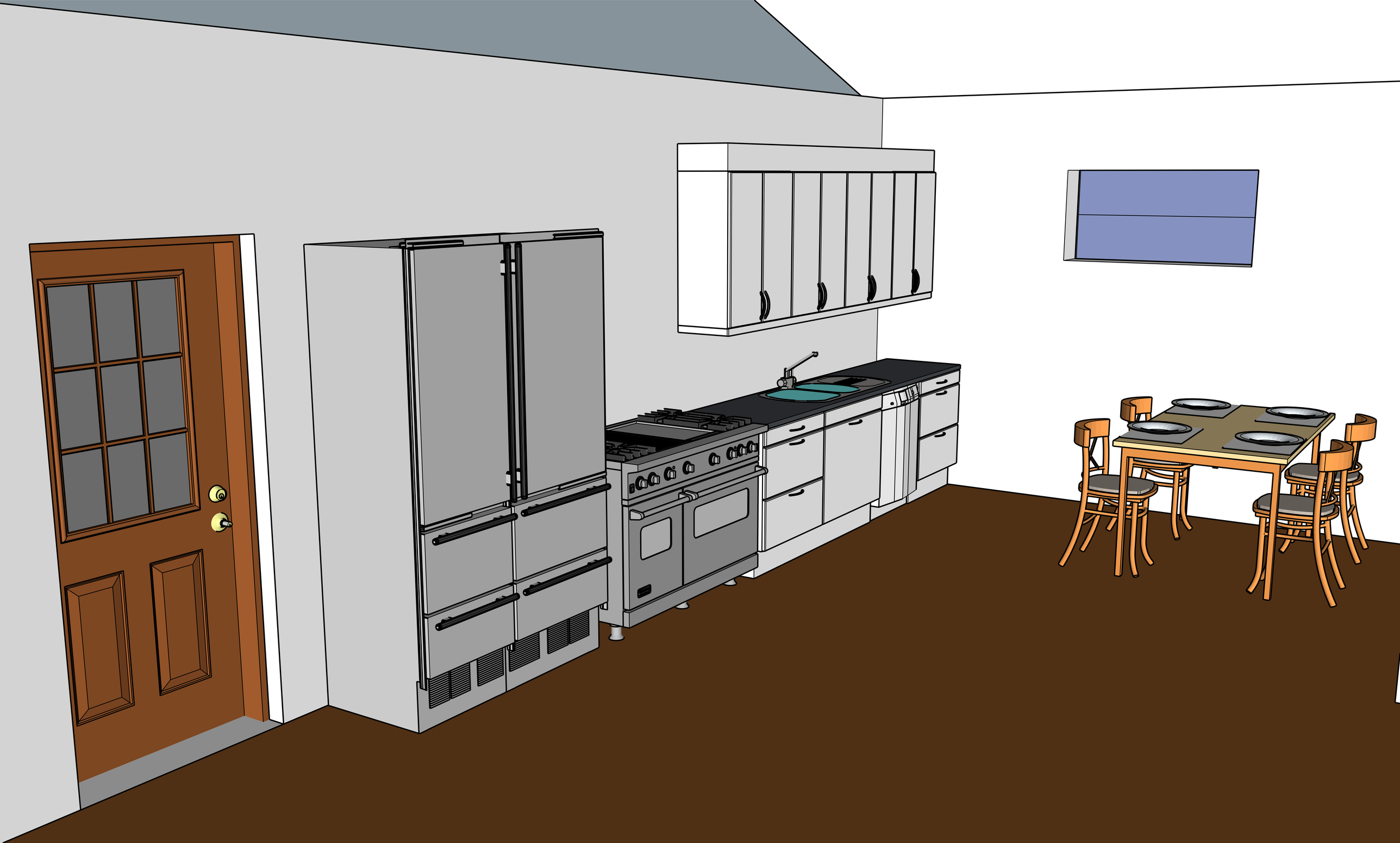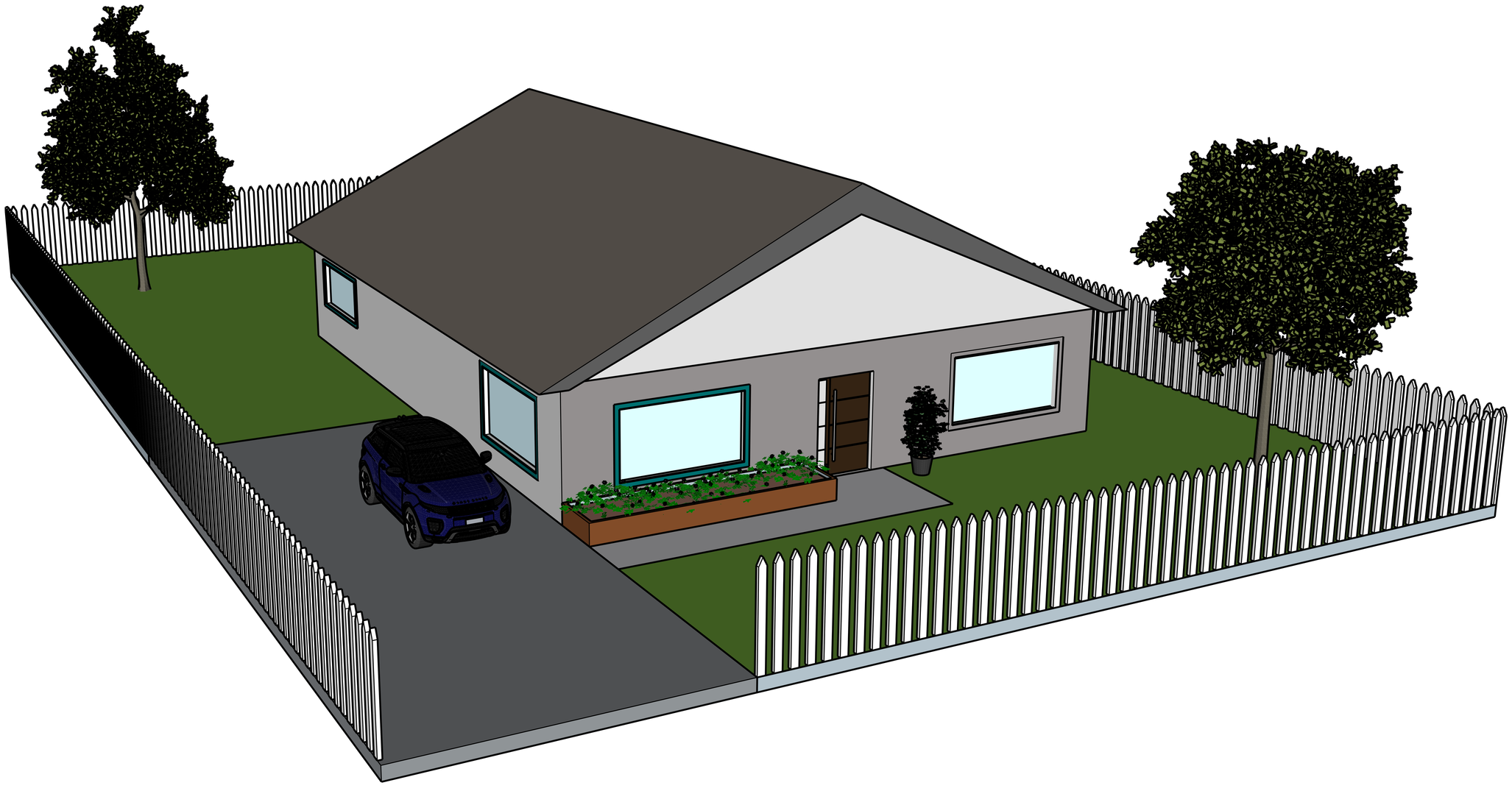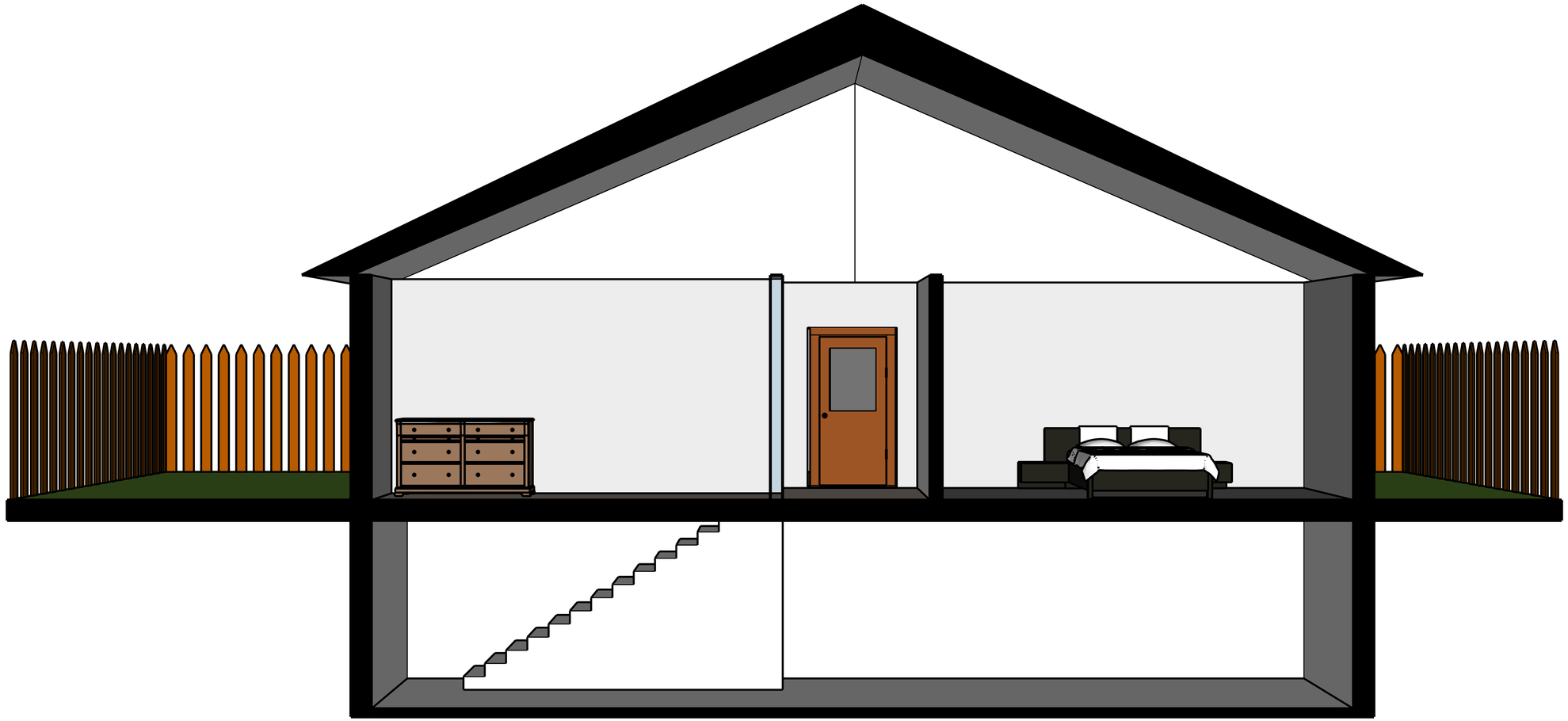
SKETCHUP